810 Invoice

X12/V4010/810: 810 Invoice

Version: 1.0.1 Draft

Author:	**ScanSource**
Publication:	
Trading Partner:	**All Vendors**
Notes:	

Table of Contents

810 Invoice 1

- **Branching Diagram - 1** 3
- **Branching Diagram - 2** 4
- **Branching Diagram - 3** 5

ISA Interchange Control Header 6
GS Functional Group Header 8
ST Transaction Set Header 10
BIG Beginning Segment for Invoice 11
REF Reference Identification 12
N1 Loop N1 13
N1 Name 14
N3 Address Information 15
N4 Geographic Location 16
ITD Terms of Sale/Deferred Terms of Sale 17
IT1 Loop IT1 18
IT1 Baseline Item Data (Invoice) 19
PID Loop PID 21
PID Product/Item Description 22
REF Reference Identification 23
CAD Carrier Detail 24
TDS Total Monetary Value Summary 25
TXI Tax Information 26
SAC Loop SAC 27
SAC Service, Promotion, Allowance, or Charge Information 28
CTT Transaction Totals 30
SE Transaction Set Trailer 31
GE Functional Group Trailer 32
IEA Interchange Control Trailer 33

810 Invoice

Functional Group=IN

This Draft Standard for Trial Use contains the format and establishes the data contents of the Invoice Transaction Set (810) for use within the context of an Electronic Data Interchange (EDI) environment. The transaction set can be used to provide for customary and established business and industry practice relative to the billing for goods and services provided.

Not Defined:

Pos	Id	Segment Name	Req	Max Use	Repeat	Notes	Usage
	ISA	Interchange Control Header	M	1			Must use
	GS	Functional Group Header	M	1			Must use

Heading:

Pos	Id	Segment Name	Req	Max Use	Repeat	Notes	Usage
010	ST	Transaction Set Header	M	1			Must use
020	BIG	Beginning Segment for Invoice	M	1			Must use
050	REF	Reference Identification	O	12			Used
LOOP ID - N1					**200**		
070	N1	Name	O	1			Used
090	N3	Address Information	O	2			Used
100	N4	Geographic Location	O	1			Used
130	ITD	Terms of Sale/Deferred Terms of Sale	O	>1			Used

Detail:

Pos	Id	Segment Name	Req	Max Use	Repeat	Notes	Usage
LOOP ID - IT1					**200000**		
010	IT1	Baseline Item Data (Invoice)	O	1			Must use
LOOP ID - PID					**1000**		
060	PID	Product/Item Description	O	1			Used
120	REF	Reference Identification	O	>1			Recommended
160	CAD	Carrier Detail	O	>1			Used

Summary:

Pos	Id	Segment Name	Req	Max Use	Repeat	Notes	Usage
010	TDS	Total Monetary Value Summary	M	1			Must use
020	TXI	Tax Information	O	10			Used
LOOP ID - SAC					**25**		
040	SAC	Service, Promotion, Allowance, or Charge Information	O	1			Used
070	CTT	Transaction Totals	O	1		N3/070	Must use
080	SE	Transaction Set Trailer	M	1			Must use

Not Defined:

Pos	Id	Segment Name	Req	Max Use	Repeat	Notes	Usage
	GE	Functional Group Trailer	M	1			Must use
	IEA	Interchange Control Trailer	M	1			Must use

Notes:

3/070 Number of line items (CTT01) is the accumulation of the number of IT1 segments. If used, hash total (CTT02) is the sum of the value of quantities invoiced (IT102) for each IT1 segment.

User Note 1:

All monetary values must be positive. If sending a credit invoice use the BIG-07 element to indicate the credit.

User Note 2:

If sending an invoice for just freight, you must include the ScanSource purchase order number and all of the associated line items with the quantities zeroed out and the freight charge in the SAC segment.

Branching Diagram: 810(Invoice)

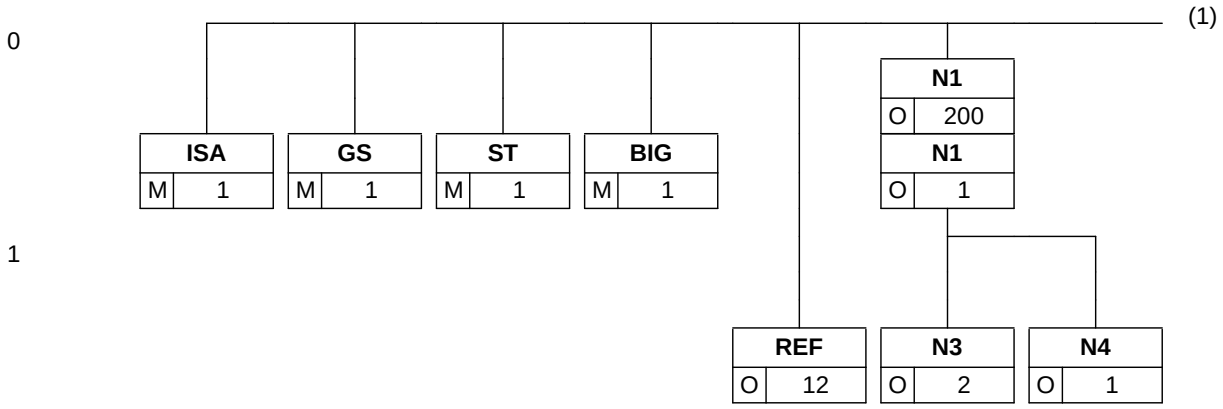

Branching Diagram: 810(Invoice)

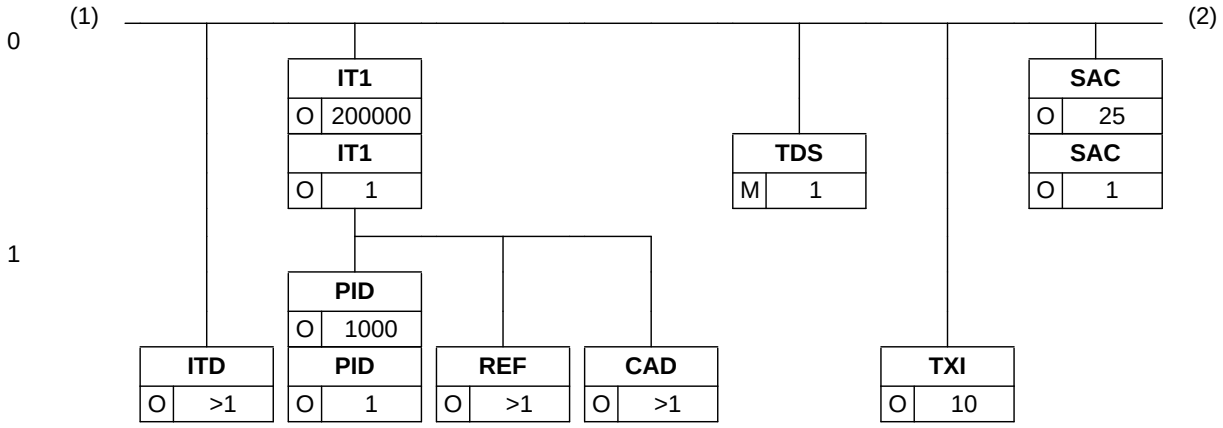

Branching Diagram: 810(Invoice)

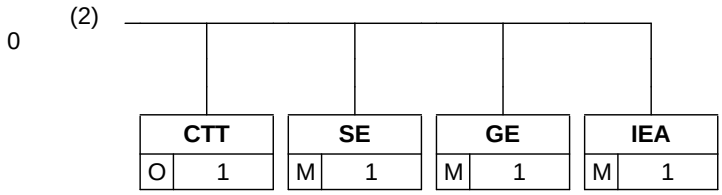

ISA Interchange Control Header

Pos:	Max: 1
Not Defined - Mandatory	
Loop: N/A	Elements: 16

User Option (Usage): Must use

To start and identify an interchange of zero or more functional groups and interchange-related control segments

Element Summary:

Ref	Id	Element Name	Req	Type	Min/Max	Usage
ISA01	I01	**Authorization Information Qualifier**	M	ID	2/2	Not used
		Description: Code to identify the type of information in the Authorization Information **All valid standard codes are used.**				
ISA02	I02	**Authorization Information**	M	AN	10/10	Must use
		Description: Information used for additional identification or authorization of the interchange sender or the data in the interchange; the type of information is set by the Authorization Information Qualifier (I01)				
ISA03	I03	**Security Information Qualifier**	M	ID	2/2	Not used
		Description: Code to identify the type of information in the Security Information **All valid standard codes are used.**				
ISA04	I04	**Security Information**	M	AN	10/10	Must use
		Description: This is used for identifying the security information about the interchange sender or the data in the interchange; the type of information is set by the Security Information Qualifier (I03)				
ISA05	I05	**Interchange ID Qualifier**	M	ID	2/2	Must use
		Description: Qualifier to designate the system/method of code structure used to designate the sender or receiver ID element being qualified **All valid standard codes are used.**				
ISA06	I06	**Interchange Sender ID**	M	AN	15/15	Must use
		Description: Identification code published by the sender for other parties to use as the receiver ID to route data to them; the sender always codes this value in the sender ID element				
ISA07	I05	**Interchange ID Qualifier**	M	ID	2/2	Must use
		Description: Qualifier to designate the system/method of code structure used to designate the sender or receiver ID element being qualified **Code** **Name** 12 Phone (Telephone Companies)				
ISA08	I07	**Interchange Receiver ID**	M	AN	15/15	Must use
		Description: Identification code published by the receiver of the data; When sending, it is used by the sender as their sending ID, thus other parties sending to them will use this as a receiving ID to route data to them				

Ref	Id	Element Name	Req	Type	Min/Max	Usage
		User Note 1: *CATALYST: 8003905376* *PARACON: 8009981221* *SCANSOURCE: 8642882432* *SCANSOURCE SECURITY: 8009648994* *TEST: 8643298222*				
ISA09	I08	**Interchange Date**	M	DT	6/6	Must use
		Description: Date of the interchange				
ISA10	I09	**Interchange Time**	M	TM	4/4	Must use
		Description: Time of the interchange				
ISA11	I10	**Interchange Control Standards Identifier**	M	ID	1/1	Must use
		Description: Code to identify the agency responsible for the control standard used by the message that is enclosed by the interchange header and trailer **All valid standard codes are used.**				
ISA12	I11	**Interchange Control Version Number**	M	ID	5/5	Must use
		Description: Code specifying the version number of the interchange control segments **All valid standard codes are used.**				
ISA13	I12	**Interchange Control Number**	M	N0	9/9	Must use
		Description: A control number assigned by the interchange sender				
ISA14	I13	**Acknowledgment Requested**	M	ID	1/1	Must use
		Description: Code sent by the sender to request an interchange acknowledgment (TA1) **All valid standard codes are used.**				
ISA15	I14	**Usage Indicator**	M	ID	1/1	Must use
		Description: Code to indicate whether data enclosed by this interchange envelope is test, production or information **All valid standard codes are used.**				
ISA16	I15	**Component Element Separator**	M		1/1	Must use
		Description: Type is not applicable; the component element separator is a delimiter and not a data element; this field provides the delimiter used to separate component data elements within a composite data structure; this value must be different than the data element separator and the segment terminator				

GS Functional Group Header

Pos:	Max: 1
Not Defined - Mandatory	
Loop: N/A	Elements: 8

User Option (Usage): Must use

To indicate the beginning of a functional group and to provide control information

Element Summary:

Ref	Id	Element Name	Req	Type	Min/Max	Usage
GS01	479	**Functional Identifier Code**	M	ID	2/2	Must use
		Description: Code identifying a group of application related transaction sets **Code** **Name** IN Invoice Information (810,819)				
GS02	142	**Application Sender's Code**	M	AN	2/15	Must use
		Description: Code identifying party sending transmission; codes agreed to by trading partners				
GS03	124	**Application Receiver's Code**	M	AN	2/15	Must use
		Description: Code identifying party receiving transmission; codes agreed to by trading partners				
		User Note 1: *CATALYST: 8003905376* *PARACON: 8009981221* *SCANSOURCE: 8642882432* *SCANSOURCE SECURITY: 8009648994* *TEST: 8643298222*				
GS04	373	**Date**	M	DT	8/8	Must use
		Description: Date expressed as CCYYMMDD				
GS05	337	**Time**	M	TM	4/8	Must use
		Description: Time expressed in 24-hour clock time as follows: HHMM, or HHMMSS, or HHMMSSD, or HHMMSSDD, where H = hours (00-23), M = minutes (00-59), S = integer seconds (00-59) and DD = decimal seconds; decimal seconds are expressed as follows: D = tenths (0-9) and DD = hundredths (00-99)				
GS06	28	**Group Control Number**	M	N0	1/9	Must use
		Description: Assigned number originated and maintained by the sender				
GS07	455	**Responsible Agency Code**	M	ID	1/2	Must use
		Description: Code identifying the issuer of the standard; this code is used in conjunction with Data Element 480 **All valid standard codes are used.**				
GS08	480	**Version / Release / Industry Identifier Code**	M	AN	1/12	Must use
		Description: Code indicating the version, release, subrelease, and industry identifier of the EDI standard being used, including the GS and GE segments; if code in DE455 in GS segment is X, then in DE 480 positions 1-3 are the version number; positions 4-6 are the				

Ref	Id	Element Name	Req	Type	Min/Max	Usage
		release and subrelease, level of the version; and positions 7-12 are the industry or trade association identifiers (optionally assigned by user); if code in DE455 in GS segment is T, then other formats are allowed				

Code	Name
004010	Draft Standards Approved for Publication by ASC X12 Procedures Review Board through October 1997

Semantics:

1. GS04 is the group date.
2. GS05 is the group time.
3. The data interchange control number GS06 in this header must be identical to the same data element in the associated functional group trailer, GE02.

Comments:

1. A functional group of related transaction sets, within the scope of X12 standards, consists of a collection of similar transaction sets enclosed by a functional group header and a functional group trailer.

ST Transaction Set Header

Pos: 010	Max: 1
Heading - Mandatory	
Loop: N/A	Elements: 2

User Option (Usage): Must use

To indicate the start of a transaction set and to assign a control number

Element Summary:

Ref	Id	Element Name	Req	Type	Min/Max	Usage
ST01	143	**Transaction Set Identifier Code**	M	ID	3/3	Must use
		Description: Code uniquely identifying a Transaction Set **All valid standard codes are used.**				
ST02	329	**Transaction Set Control Number**	M	AN	4/9	Must use
		Description: Identifying control number that must be unique within the transaction set functional group assigned by the originator for a transaction set				

Semantics:

1. The transaction set identifier (ST01) used by the translation routines of the interchange partners to select the appropriate transaction set definition (e.g., 810 selects the Invoice Transaction Set).

BIG Beginning Segment for Invoice

Pos: 020 **Max: 1**
Heading - Mandatory
Loop: N/A **Elements: 5**

User Option (Usage): Must use

To indicate the beginning of an invoice transaction set and transmit identifying numbers and dates

Element Summary:

Ref	Id	Element Name	Req	Type	Min/Max	Usage
BIG01	373	**Date**	M	DT	8/8	Must use
		Description: Date expressed as CCYYMMDD				
BIG02	76	**Invoice Number**	M	AN	1/22	Must use
		Description: Identifying number assigned by issuer				
BIG03	373	**Date**	O	DT	8/8	Must use
		Description: Date expressed as CCYYMMDD				
BIG04	324	**Purchase Order Number**	O	AN	1/22	Must use
		Description: Identifying number for Purchase Order assigned by the orderer/purchaser				
BIG07	640	**Transaction Type Code**	O	ID	2/2	Used
		Description: Code specifying the type of transaction				

Code	Name
CN	Credit Invoice
DI	Debit Invoice

Semantics:

1. BIG01 is the invoice issue date.
2. BIG03 is the date assigned by the purchaser to purchase order.
3. BIG10 indicates the consolidated invoice number. When BIG07 contains code CI, BIG10 is not used.

Comments:

1. BIG07 is used only to further define the type of invoice when needed.

REF Reference Identification

Pos: 050	Max: 12
Heading - Optional	
Loop: N/A	Elements: 2

User Option (Usage): Used

To specify identifying information

Element Summary:

Ref	Id	Element Name	Req	Type	Min/Max	Usage
REF01	128	**Reference Identification Qualifier**	M	ID	2/3	Must use
		Description: Code qualifying the Reference Identification				
		Code **Name** 2I Tracking Number AW Air Waybill Number VN Vendor Order Number				
REF02	127	**Reference Identification**	X	AN	1/30	Used
		Description: Reference information as defined for a particular Transaction Set or as specified by the Reference Identification Qualifier				

Syntax Rules:

1. R0203 - At least one of REF02 or REF03 is required.

Semantics:

1. REF04 contains data relating to the value cited in REF02.

Loop N1

Pos: 070	Repeat: 200
Optional	
Loop: N1	Elements: N/A

User Option (Usage): Used

To identify a party by type of organization, name, and code

Loop Summary:

Pos	Id	Segment Name	Req	Max Use	Repeat	Usage
070	N1	Name	O	1		Used
090	N3	Address Information	O	2		Used
100	N4	Geographic Location	O	1		Used

N1 Name

Pos: 070	Max: 1
Heading - Optional	
Loop: N1	Elements: 2

User Option (Usage): Used

To identify a party by type of organization, name, and code

Element Summary:

Ref	Id	Element Name	Req	Type	Min/Max	Usage
N101	98	**Entity Identifier Code**	M	ID	2/3	Must use
		Description: Code identifying an organizational entity, a physical location, property or an individual				
		Code **Name** BT Bill-to-Party ST Ship To				
N102	93	**Name**	X	AN	1/60	Used
		Description: Free-form name				

Syntax Rules:

1. R0203 - At least one of N102 or N103 is required.
2. P0304 - If either N103 or N104 is present, then the other is required.

Comments:

1. This segment, used alone, provides the most efficient method of providing organizational identification. To obtain this efficiency the "ID Code" (N104) must provide a key to the table maintained by the transaction processing party.
2. N105 and N106 further define the type of entity in N101.

N3 Address Information

Pos: 090	Max: 2
Heading - Optional	
Loop: N1	Elements: 2

User Option (Usage): Used

To specify the location of the named party

Element Summary:

Ref	Id	Element Name	Req	Type	Min/Max	Usage
N301	166	**Address Information** **Description:** Address information	M	AN	1/55	Must use
N302	166	**Address Information** **Description:** Address information	O	AN	1/55	Used

N4 Geographic Location

Pos: 100	Max: 1
Heading - Optional	
Loop: N1	Elements: 6

User Option (Usage): Used

To specify the geographic place of the named party

Element Summary:

Ref	Id	Element Name	Req	Type	Min/Max	Usage
N401	19	**City Name**	O	AN	2/30	Used
		Description: Free-form text for city name				
N402	156	**State or Province Code**	O	ID	2/2	Used
		Description: Code (Standard State/Province) as defined by appropriate government agency				
N403	116	**Postal Code**	O	ID	3/15	Used
		Description: Code defining international postal zone code excluding punctuation and blanks (zip code for United States)				
N404	26	**Country Code**	O	ID	2/3	Used
		Description: Code identifying the country				
N405	309	**Location Qualifier**	X	ID	1/2	Used
		Description: Code identifying type of location **All valid standard codes are used.**				
N406	310	**Location Identifier**	O	AN	1/30	Used
		Description: Code which identifies a specific location				

Syntax Rules:

1. C0605 - If N406 is present, then N405 is required.

Comments:

1. A combination of either N401 through N404, or N405 and N406 may be adequate to specify a location.
2. N402 is required only if city name (N401) is in the U.S. or Canada.

ITD Terms of Sale/Deferred Terms of Sale

Pos: 130 **Max: >1**
Heading - Optional
Loop: N/A **Elements: 6**

User Option (Usage): Used

To specify terms of sale

Element Summary:

Ref	Id	Element Name	Req	Type	Min/Max	Usage
ITD01	336	**Terms Type Code**	O	ID	2/2	Used
		Description: Code identifying type of payment terms				
		Code **Name** 01 Basic				
ITD02	333	**Terms Basis Date Code**	O	ID	1/2	Used
		Description: Code identifying the beginning of the terms period				
		Code **Name** 3 Invoice Date				
ITD03	338	**Terms Discount Percent**	O	R	1/6	Used
		Description: Terms discount percentage, expressed as a percent, available to the purchaser if an invoice is paid on or before the Terms Discount Due Date				
ITD05	351	**Terms Discount Days Due**	X	N0	1/3	Used
		Description: Number of days in the terms discount period by which payment is due if terms discount is earned				
ITD07	386	**Terms Net Days**	O	N0	1/3	Used
		Description: Number of days until total invoice amount is due (discount not applicable)				
ITD12	352	**Description**	O	AN	1/80	Used
		Description: A free-form description to clarify the related data elements and their content				

Syntax Rules:

1. L03040513 - If ITD03 is present, then at least one of ITD04, ITD05 or ITD13 is required.
2. L08040513 - If ITD08 is present, then at least one of ITD04, ITD05 or ITD13 is required.
3. L091011 - If ITD09 is present, then at least one of ITD10 or ITD11 is required.

Semantics:

1. ITD15 is the percentage applied to a base amount used to determine a late payment charge.

Comments:

1. If the code in ITD01 is "04", then ITD07 or ITD09 is required and either ITD10 or ITD11 is required; if the code in ITD01 is "05", then ITD06 or ITD07 is required.

Loop IT1

Pos: 010	Repeat: 200000
Optional	
Loop: IT1	Elements: N/A

User Option (Usage): Must use

To specify the basic and most frequently used line item data for the invoice and related transactions

Loop Summary:

Pos	Id	Segment Name	Req	Max Use	Repeat	Usage
010	IT1	Baseline Item Data (Invoice)	O	1		Must use
060		Loop PID	O		1000	Used
120	REF	Reference Identification	O	>1		Recommended
160	CAD	Carrier Detail	O	>1		Used

IT1 Baseline Item Data (Invoice)

Pos: 010	Max: 1
Detail - Optional	
Loop: IT1	Elements: 11

User Option (Usage): Must use

To specify the basic and most frequently used line item data for the invoice and related transactions

Element Summary:

Ref	Id	Element Name	Req	Type	Min/Max	Usage
IT101	350	**Assigned Identification**	O	AN	1/20	Not recommended
		Description: Alphanumeric characters assigned for differentiation within a transaction set **User Note 1:** *The IT1-01 should be the ScanSource purchase order line item number.*				
IT102	358	**Quantity Invoiced**	X	R	1/10	Must use
		Description: Number of units invoiced (supplier units)				
IT103	355	**Unit or Basis for Measurement Code**	X	ID	2/2	Must use
		Description: Code specifying the units in which a value is being expressed, or manner in which a measurement has been taken **User Note 1:** *ScanSource only orders in 'each'. We will accept invoices in 'each', 'piece' or 'unit' but they are all concidered an 'each'.* **User Note 2:** *Special arangements must be made for any unit of measure not listed below.*				
		Code **Name** EA Each PC Piece UN Unit				
IT104	212	**Unit Price**	X	R	1/17	Must use
		Description: Price per unit of product, service, commodity, etc.				
IT105	639	**Basis of Unit Price Code**	O	ID	2/2	Not used
		Description: Code identifying the type of unit price for an item **All valid standard codes are used.**				
IT106	235	**Product/Service ID Qualifier**	X	ID	2/2	Must use
		Description: Code identifying the type/source of the descriptive number used in Product/Service ID (234)				
		Code **Name** MG Manufacturer's Part Number				
IT107	234	**Product/Service ID**	X	AN	1/48	Must use
		Description: Identifying number for a product or service				
IT108	235	**Product/Service ID Qualifier**	X	ID	2/2	Used
		Description: Code identifying the type/source of the descriptive number used in Product/Service ID (234)				

		Code **Name** BP Buyer's Part Number				
IT109	234	**Product/Service ID**	X	AN	1/48	Used
		Description: Identifying number for a product or service				
IT110	235	**Product/Service ID Qualifier**	X	ID	2/2	Used
		Description: Code identifying the type/source of the descriptive number used in Product/Service ID (234)				
		Code **Name** VP Vendor's (Seller's) Part Number				
IT111	234	**Product/Service ID**	X	AN	1/48	Used
		Description: Identifying number for a product or service				

Syntax Rules:

1. P020304 - If either IT102, IT103 or IT104 are present, then the others are required.
2. P0607 - If either IT106 or IT107 is present, then the other is required.
3. P0809 - If either IT108 or IT109 is present, then the other is required.
4. P1011 - If either IT110 or IT111 is present, then the other is required.
5. P1213 - If either IT112 or IT113 is present, then the other is required.
6. P1415 - If either IT114 or IT115 is present, then the other is required.
7. P1617 - If either IT116 or IT117 is present, then the other is required.
8. P1819 - If either IT118 or IT119 is present, then the other is required.
9. P2021 - If either IT120 or IT121 is present, then the other is required.
10. P2223 - If either IT122 or IT123 is present, then the other is required.
11. P2425 - If either IT124 or IT125 is present, then the other is required.

Semantics:

1. IT101 is the purchase order line item identification.

Comments:

1. Element 235/234 combinations should be interpreted to include products and/or services. See the Data Dictionary for a complete list of IDs.
2. IT106 through IT125 provide for ten different product/service IDs for each item. For example: Case, Color, Drawing No., U.P.C. No., ISBN No., Model No., or SKU.

Loop PID

Pos: 060 Repeat: 1000
Optional
Loop: PID Elements: N/A

User Option (Usage): Used

To describe a product or process in coded or free-form format

Loop Summary:

Pos	Id	Segment Name	Req	Max Use	Repeat	Usage
060	PID	Product/Item Description	O	1		Used

PID Product/Item Description

Pos: 060	Max: 1
Detail - Optional	
Loop: PID	Elements: 2

User Option (Usage): Used

To describe a product or process in coded or free-form format

Element Summary:

Ref	Id	Element Name	Req	Type	Min/Max	Usage
PID01	349	**Item Description Type**	M	ID	1/1	Must use
		Description: Code indicating the format of a description **All valid standard codes are used.**				
PID05	352	**Description**	X	AN	1/80	Used
		Description: A free-form description to clarify the related data elements and their content				

Syntax Rules:

1. C0403 - If PID04 is present, then PID03 is required.
2. R0405 - At least one of PID04 or PID05 is required.
3. C0703 - If PID07 is present, then PID03 is required.
4. C0804 - If PID08 is present, then PID04 is required.
5. C0905 - If PID09 is present, then PID05 is required.

Semantics:

1. Use PID03 to indicate the organization that publishes the code list being referred to.
2. PID04 should be used for industry-specific product description codes.
3. PID08 describes the physical characteristics of the product identified in PID04. A "Y" indicates that the specified attribute applies to this item; an "N" indicates it does not apply. Any other value is indeterminate.
4. PID09 is used to identify the language being used in PID05.

Comments:

1. If PID01 equals "F", then PID05 is used. If PID01 equals "S", then PID04 is used. If PID01 equals "X", then both PID04 and PID05 are used.
2. Use PID06 when necessary to refer to the product surface or layer being described in the segment.
3. PID07 specifies the individual code list of the agency specified in PID03.

REF Reference Identification

Pos: 120	Max: >1
Detail - Optional	
Loop: IT1	Elements: 2

User Option (Usage): Recommended

To specify identifying information

Element Summary:

Ref	Id	Element Name	Req	Type	Min/Max	Usage
REF01	128	**Reference Identification Qualifier**	M	ID	2/3	Must use
		Description: Code qualifying the Reference Identification				
		Code **Name** SN Seal Number				
REF02	127	**Reference Identification**	X	AN	1/30	Used
		Description: Reference information as defined for a particular Transaction Set or as specified by the Reference Identification Qualifier				

Syntax Rules:

1. R0203 - At least one of REF02 or REF03 is required.

Semantics:

1. REF04 contains data relating to the value cited in REF02.

User Note 1:

Serial numbers are extremely important to ScanSource and while this segment is not mandatory as not all parts have serial numbers, please, ensure that all serial numbers are communicated to ScanSource via this REF segment.

CAD Carrier Detail

Pos: 160	Max: >1
Detail - Optional	
Loop: IT1	Elements: 2

User Option (Usage): Used

To specify transportation details for the transaction

Element Summary:

Ref	Id	Element Name	Req	Type	Min/Max	Usage
CAD04	140	**Standard Carrier Alpha Code**	X	ID	2/4	Used
		Description: Standard Carrier Alpha Code				
CAD05	387	**Routing**	X	AN	1/35	Used
		Description: Free-form description of the routing or requested routing for shipment, or the originating carrier's identity				

Syntax Rules:

1. R0504 - At least one of CAD05 or CAD04 is required.
2. C0708 - If CAD07 is present, then CAD08 is required.

TDS Total Monetary Value Summary

Pos: 010	Max: 1
Summary - Mandatory	
Loop: N/A	Elements: 1

User Option (Usage): Must use

To specify the total invoice discounts and amounts

Element Summary:

Ref	Id	Element Name	Req	Type	Min/Max	Usage
TDS01	610	**Amount** **Description:** Monetary amount	M	N2	1/15	Must use

Semantics:

1. TDS01 is the total amount of invoice (including charges, less allowances) before terms discount (if discount is applicable).
2. TDS02 indicates the amount upon which the terms discount amount is calculated.
3. TDS03 is the amount of invoice due if paid by terms discount due date (total invoice or installment amount less cash discount).
4. TDS04 indicates the total amount of terms discount.

Comments:

1. TDS02 is required if the dollar value subject to discount is not equal to the dollar value of TDS01.

TXI Tax Information

Pos: 020	Max: 10
Summary - Optional	
Loop: N/A	Elements: 2

User Option (Usage): Used

To specify tax information

Element Summary:

Ref	Id	Element Name	Req	Type	Min/Max	Usage
TXI01	963	**Tax Type Code**	M	ID	2/2	Must use
		Description: Code specifying the type of tax				
		Code **Name** GS Goods and Services Tax SP State/Provincial Tax TX All Taxes				
TXI02	782	**Monetary Amount**	X	R	1/18	Used
		Description: Monetary amount				

Syntax Rules:

1. R020306 - At least one of TXI02, TXI03 or TXI06 is required.
2. P0405 - If either TXI04 or TXI05 is present, then the other is required.
3. C0803 - If TXI08 is present, then TXI03 is required.

Semantics:

1. TXI02 is the monetary amount of the tax.
2. TXI03 is the tax percent expressed as a decimal.
3. TXI07 is a code indicating the relationship of the price or amount to the associated segment.

Loop SAC

Pos: 040	Repeat: 25
Optional	
Loop: SAC	Elements: N/A

User Option (Usage): Used

To request or identify a service, promotion, allowance, or charge; to specify the amount or percentage for the service, promotion, allowance, or charge

Loop Summary:

Pos	Id	Segment Name	Req	Max Use	Repeat	Usage
040	SAC	Service, Promotion, Allowance, or Charge Information	O	1		Used

SAC Service, Promotion, Allowance, or Charge Information

Pos: 040 **Max: 1**
Summary - Optional
Loop: SAC **Elements: 4**

User Option (Usage): Used

To request or identify a service, promotion, allowance, or charge; to specify the amount or percentage for the service, promotion, allowance, or charge

Element Summary:

Ref	Id	Element Name	Req	Type	Min/Max	Usage
SAC01	248	**Allowance or Charge Indicator**	M	ID	1/1	Must use
		Description: Code which indicates an allowance or charge for the service specified				
		Code **Name** C Charge				
SAC02	1300	**Service, Promotion, Allowance, or Charge Code**	X	ID	4/4	Used
		Description: Code identifying the service, promotion, allowance, or charge				
		Code **Name** D240 Freight D980 Insurance H740 Tax - Sales and Use				
SAC05	610	**Amount**	O	N2	1/15	Used
		Description: Monetary amount				
SAC12	331	**Allowance or Charge Method of Handling Code**	O	ID	2/2	Used
		Description: Code indicating method of handling for an allowance or charge				
		Code **Name** 02 Off Invoice 03 Vendor Check to Customer 04 Credit Customer Account 05 Charge to be Paid by Vendor 06 Charge to be Paid by Customer				

Syntax Rules:

1. R0203 - At least one of SAC02 or SAC03 is required.
2. P0304 - If either SAC03 or SAC04 is present, then the other is required.
3. P0607 - If either SAC06 or SAC07 is present, then the other is required.
4. P0910 - If either SAC09 or SAC10 is present, then the other is required.
5. C1110 - If SAC11 is present, then SAC10 is required.
6. L130204 - If SAC13 is present, then at least one of SAC02 or SAC04 is required.
7. C1413 - If SAC14 is present, then SAC13 is required.

8. C1615 - If SAC16 is present, then SAC15 is required.

Semantics:

1. If SAC01 is "A" or "C", then at least one of SAC05, SAC07, or SAC08 is required.
2. SAC05 is the total amount for the service, promotion, allowance, or charge.
3. If SAC05 is present with SAC07 or SAC08, then SAC05 takes precedence.
4. SAC08 is the allowance or charge rate per unit.
5. SAC10 and SAC11 is the quantity basis when the allowance or charge quantity is different from the purchase order or invoice quantity.
6. SAC10 and SAC11 used together indicate a quantity range, which could be a dollar amount, that is applicable to service, promotion, allowance, or charge.
7. SAC13 is used in conjunction with SAC02 or SAC04 to provide a specific reference number as identified by the code used.
8. SAC14 is used in conjunction with SAC13 to identify an option when there is more than one option of the promotion.
9. SAC16 is used to identify the language being used in SAC15.

Comments:

1. SAC04 may be used to uniquely identify the service, promotion, allowance, or charge. In addition, it may be used in conjunction to further the code in SAC02.
2. In some business applications, it is necessary to advise the trading partner of the actual dollar amount that a particular allowance, charge, or promotion was based on to reduce ambiguity. This amount is commonly referred to as "Dollar Basis Amount". It is represented in the SAC segment in SAC10 using the qualifier "DO" - Dollars in SAC09.

CTT Transaction Totals

Pos: 070	Max: 1
Summary - Optional	
Loop: N/A	Elements: 2

User Option (Usage): Must use

To transmit a hash total for a specific element in the transaction set

Element Summary:

Ref	Id	Element Name	Req	Type	Min/Max	Usage
CTT01	354	**Number of Line Items**	M	N0	1/6	Must use
		Description: Total number of line items in the transaction set				
CTT02	347	**Hash Total**	O	R	1/10	Future
		Description: Sum of values of the specified data element. All values in the data element will be summed without regard to decimal points (explicit or implicit) or signs. Truncation will occur on the left most digits if the sum is greater than the maximum size of the hash total of the data element. Example: -.0018 First occurrence of value being hashed. .18 Second occurrence of value being hashed. 1.8 Third occurrence of value being hashed. 18.01 Fourth occurrence of value being hashed. --------- 1855 Hash total prior to truncation. 855 Hash total after truncation to three-digit field.				

Syntax Rules:

1. P0304 - If either CTT03 or CTT04 is present, then the other is required.
2. P0506 - If either CTT05 or CTT06 is present, then the other is required.

Comments:

1. This segment is intended to provide hash totals to validate transaction completeness and correctness.

SE Transaction Set Trailer

Pos: 080	Max: 1
Summary - Mandatory	
Loop: N/A	Elements: 2

User Option (Usage): Must use

To indicate the end of the transaction set and provide the count of the transmitted segments (including the beginning (ST) and ending (SE) segments)

Element Summary:

Ref	Id	Element Name	Req	Type	Min/Max	Usage
SE01	96	**Number of Included Segments**	M	N0	1/10	Must use
		Description: Total number of segments included in a transaction set including ST and SE segments				
SE02	329	**Transaction Set Control Number**	M	AN	4/9	Must use
		Description: Identifying control number that must be unique within the transaction set functional group assigned by the originator for a transaction set				

Comments:

1. SE is the last segment of each transaction set.

GE Functional Group Trailer

Pos:	Max: 1
Not Defined - Mandatory	
Loop: N/A	Elements: 2

User Option (Usage): Must use

To indicate the end of a functional group and to provide control information

Element Summary:

Ref	Id	Element Name	Req	Type	Min/Max	Usage
GE01	97	**Number of Transaction Sets Included**	M	N0	1/6	Must use
		Description: Total number of transaction sets included in the functional group or interchange (transmission) group terminated by the trailer containing this data element				
GE02	28	**Group Control Number**	M	N0	1/9	Must use
		Description: Assigned number originated and maintained by the sender				

Semantics:

1. The data interchange control number GE02 in this trailer must be identical to the same data element in the associated functional group header, GS06.

Comments:

1. The use of identical data interchange control numbers in the associated functional group header and trailer is designed to maximize functional group integrity. The control number is the same as that used in the corresponding header.

IEA Interchange Control Trailer

Pos:	Max: 1
Not Defined - Mandatory	
Loop: N/A	Elements: 2

User Option (Usage): Must use

To define the end of an interchange of zero or more functional groups and interchange-related control segments

Element Summary:

Ref	Id	Element Name	Req	Type	Min/Max	Usage
IEA01	I16	**Number of Included Functional Groups**	M	N0	1/5	Must use
		Description: A count of the number of functional groups included in an interchange				
IEA02	I12	**Interchange Control Number**	M	N0	9/9	Must use
		Description: A control number assigned by the interchange sender				